Date: Thurs, 5/24/18	***Location***: Gavin's House	***Purpose***: Team Party

Attendees: Entire team

Agenda:

- End of season team party

Reflections:

The entire team gathered for the end of season party. During this party we took a moment to reflect back on our accomplishments and each received a small trophy. It's been a great season! We'll miss our seniors!

This section is intentionally left blank.

Date: Fri, 5/25/2018	***Location***: Belbas House	***Purpose***: Parent Meeting

Attendees: Entire team

Agenda:
- Discuss summer availability and plan summer outreach

Reflections:
Today, the team and their parents met for a “planning” meeting. We discussed many topics for the new season but primarily planned the outreach for the summer. This included presentations at sponsors, finishing *411 With 404*, and other ways we can reach out to our community.

This Season, we plan to train the Error 404 members to learn:
- CAD,
- 3D Printing,
- Routing,
- Programming

Outreach is very important to Error 404. We strive to teach as much as we can, to as many as we can. And Summer’s the time to do it. Here is a list of what we plan to do. We plan to:
- Finish our video tutorial library, *411 With 404*
- Teach FTC Workshops at San Jac
- Teach FLL Workshop
- Mentor an international team
- Develop 3D Printing Webinar
- Assist Pearland as they are hosting the league meets
- Continue to mentor FLL teams

This section is intentionally left blank.

Date: Tue, 5/29/2018	***Location***: Belbas House	***Purpose***: Subgroup

Attendees: Luke, Mariah, Nick, Coach Belbas

Agenda:

- Discuss ways to complete 411 With 404

Reflections:

(Mariah, Luke): Today we updated the spreadsheet that had all the lists of tutorial videos that we felt important to make. We then decided which videos to assign to each of us for the summer. We went further to make a storyboard, or outline for the videos to be edited. One of our team's Alumni, Nick, helped us plan which videos to do, which will help us complete some of the videos we never got to finish last season. Nick had been involved with editing the previous seasons 411 with 404 videos, which means he's a great mentor to ask when we have video questions!

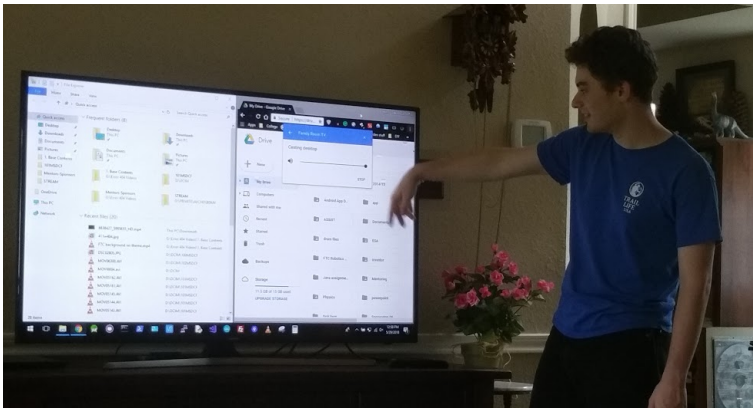

This section is intentionally left blank.

Date: Mon, 6/25-28/18	***Location***: Belbas house	***Purpose***: CAD Training

Attendees: Entire team

Agenda:

- Learn how to design a gusset (including how to do a CAD drawing)

Reflections:

During the summer, Coach Belbas thought it would be a good idea to teach the team how to use CAD, as we had lost two of our main CADers to college. We spent the week designing a simple gusset and at the end of the week we 3D printed it. We learned different tools and tricks in Fusion to help us with everyday designing techniques.

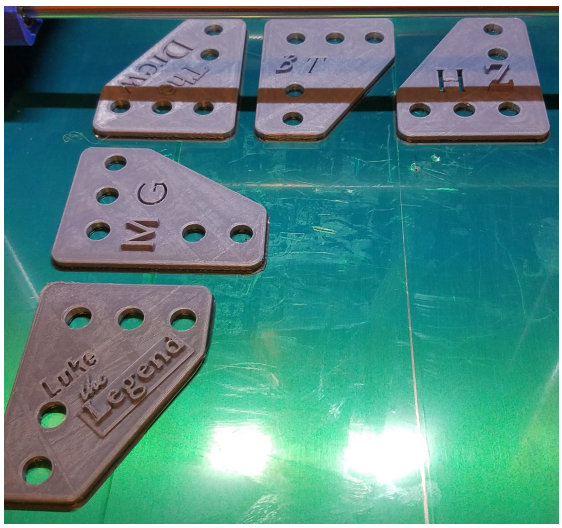

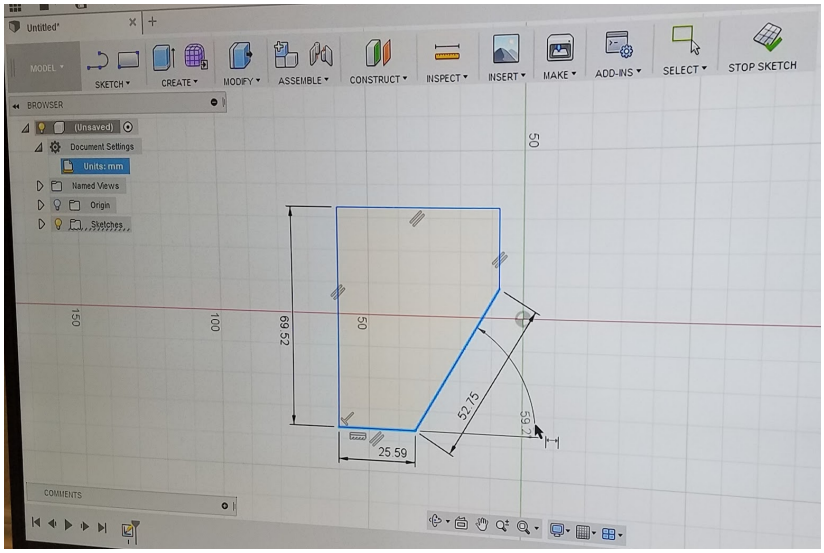

Date: Sat, 9/8/2018	***Location***: Johnson Space Center	***Purpose***: FTC Kickoff

Attendees: Luke, Mark, Andrew, Mariah, Joel, Ben, Mr. Lee, Mr. Bell, Enrico, Nick, Thunderbolts

Agenda:

- Learn the challenge, brainstorm ideas, and strategize

Reflections:

- (Mark) - I think we will need a very quick and agile robot. It might also need to be heavier to prevent unwanted pushing. I think if we could just use one mechanical device for hanging and collecting and deploying the elements we would save time designing more parts. This would also help if we wanted a lighter robot to lessen the load while hanging. Possible three wheel design eliminates one motor and wheel assembly also lightening robot. I think we need some sort of gate or system to distinguish between cubes and spheres. This would help drivers greatly and speed the collection time up. Need to start with geared drivetrain from beginning.

- (Mariah) - In last year's FRC challenge, teams in the end game could get points for hanging their robot on a rope. Unlike FTC Rover Ruckus, the rope was already connected to the structures in the field (the airships) and the robots had to "climb" the ropes. On the robots I saw who competed in last year's challenge, they used a winch on the front of their robot. This allowed them to drive towards the rope and while the winch was spinning, the rope would get caught in the winch and act as a pulling device. Since the Rover Ruckus structure does not have a rope already attached, a gravity hook may be able to be used. A gravity hook closes when weight is attached, and opens when no weight is attached. My idea: When connected to the structure in Rover Ruckus during the autonomous period, we could rotate the winch in the opposite direction in order to quickly get the robot to the ground. Potential problem: I noticed in the challenge video it says, "parts may not be deliberately detached from robots during a match." That may mean we need a way to attach the rope and unattach it when coming and going from the hanging site.

Date: Mon, 9/10/18	***Location***: Belbas House	***Purpose***: Team Meeting #1

Attendees: Coach Belbas, Mrs. Dalton, Mrs. Tate, Mr. Bell, Andrew, Ben, Mark, Mariah, Zach

Agenda:
- Talk to Robo Sapiens
- Strategize robot sprints
- Overview of Team Code of Conduct doc.

Reflections:
- We did an overview of the new FIRST Core Values and practiced giving an example of them.
- The team talked to Robo Sapiens for thirty or so minutes and answered any questions they had.
- We went through the Team Code of Conduct document that each team member is required to sign at the beginning of the season as well as the Parent Code of Conduct document.
- Planned goals for the first three sprints:
  - ***Sprint 1 (Meet 1, 11-10-18):***
    - Chassis that is able to fully enter and exit the crater
      - Test 4-wheel Mecanum vs Tank Treads with turret
    - Mineral intake and deployment system
      - Holds 2 minerals - Driver decides which minerals to pick up
    - Autonomous:
      - Park for 10 points
      - Flag in base for 15 points
      - Knock off gold mineral for 25 points
    - Park completely in the crater during Endgame.
  - ***Sprint 2 (Meet 2, 12-8-18):***
    - Develop mechanism to start robot latched at beginning of match
    - Develop mineral sorting capability
  - ***Sprint 3 (Meet 3, 1-12-19):***
    - Able to hang at the end of match

Category Idea Name

Chassis Use suspension on the wheels to provide for quick scaling of the “crater”. Check out the mantis bot at Servo City. https://www.servocity.com/6wd-mini-mantis. I’m not sure it’s legal to buy the whole chassis but certainly the 4 bar linkage idea. How about meccaum with suspension: https://www.youtube.com/watch?v=K1yDDmkbaq4 Mrs. Belbas

Arm 4 bar linkage: https://www.youtube.com/watch?v=kPe8ZBII_lg Mrs. Belbas

Linear slide Mark

Collection Linear slide to go over crater perimeter with collection system attached Mark

Collection Vacuum/suction to collect minerals (unique but probably not practical) Zach

Arm Vertical arm used to extend from crater to cargo hold & possibly used in hanging/lowering : https://www.youtube.com/watch?v=0fRt6sdKN7Y Ben

Date: Friday, 9/14/18	***Location***: Jacobs, Belbas House	***Purpose***: Team Meeting #2

Attendees: Joel, Ben, Zach, Mark, Mariah, Luke, Mr. Bell, Nick, Andrew, Coach Belbas, and a Bunch of Jacobs engineers

Agenda:

- Brainstorm with our Jacobs mentors on both the chassis and the arm mechanism.
- Begin building the field kit.

Reflections:

- The entire team divided into two groups to brainstorm ideas for our chassis and arm. A recurring idea among one group was that our robot should be stationary while collecting and delivering the gold and silver. This can be achieved through two means: a type of escalator, which would bridge the 4' distance between the crater and the drop-point, the second idea is the use of a long arm which can pivot between the crater and drop-point.

- Andrew, Mariah, Mark, Ben, and several Jacobs engineers talked in depth about sorting the minerals. There are two types: Balls and Cubes. We want to be able to dumbly sort through a big pile of minerals and only come out with cubes. Dumbly meaning without the use of sensors or some kind of internal sorting mechanism because that takes time and is more complicated. We were going for something that's simple and doesn't require special handling to work. What we came down to was that the two types of minerals are different sizes. Barely. Placed side by side on a table, the ball has a noticeably bigger diameter than the cube. So we want to design an intake that only lets the smaller cubes in. However, those cubes are going to be in a bunch of different orientations and our system needs to be able to take in a cube from any orientation (straight on, diagonal, anywhere in between). The thing is, the diagonal of the cube is pretty much the same as the ball's diameter, meaning that if we made our intake big enough to take a diagonal cube, the balls could slip in as well. So in order to only take in cubes, our intake has to be narrowed, meaning that it can no longer take cubes at a diagonal. The solution we came up with is reorienting the cube so that it comes in straight. But again, this needs to be a dumb process (no sensors or driver interference needed) to preserve efficiency and time. Our first idea was to use a Y-shaped funnel to reorient the cubes (drawing all the way on the left). But if a cube came in completely diagonal and stayed that way, it would get stuck, so that won't work. The next idea is the two drawings on the right. If you stagger the intake funnel sides, the cube can come in at any angle and will rotate around to be straight. This design is great because it is physically impossible for a ball to enter the intake system, and the cubes are reoriented without the driver needed to maneuver the robot. The intake will obviously have the ability to open up so that it could receive balls if needed. But what happens if a ball gets wedged in front of the intake? We need a way to force the ball back. On the side view of the intake (bottom right) there are two rollers. One back behind and one midway. The midway one is raised up some. Since coming straight on, the cubes are smaller than the balls, if we have a roller just above the height of the cube, the cube will be able to pass underneath it, but the balls will hit the roller and be pushed back. Then if the intake is opened up to take in balls, the roller can be reversed and can suck in balls. This design is completely self sufficient. It doesn't require driver aid or autonomous decisions. The driver just drives the robot into the pile and the intake will only accept cubes and will orient the cubes by itself, no fancy suit of sensors and motors needed.

- Luke, Zach, Joel, and some JACOBS engineers brainstormed ideas to collect points from the crater. The primary idea we discussed was a conveyor belt design to sort out the balls, from the cubes assuming we collect one of each. The idea is that if there is one ball, and one cube, the belt would be at a leaning angle, so the round balls would “roll” into the ball’s side of the belt whereas the friction of the cube would let the cube stick to the belt and stay on it’s path.They also brainstormed with several Jacobs engineers about having an arm that can collect minerals and then rotate over the robot to dump into the cargo hold. We also briefly discussed having a simple mechanism to launch the minerals into the cargo hold that would simply pop them in with just enough power (see pictures below).

- (Ben): Andrew, Mariah, Mark and I spoke with several of the Jacobs Engineers about a robot arm design that could pick up both types of minerals (gold & silver). We based most of our ideas on filtering the minerals so that we only picked up only 2 gold or 2 silver only. We had many ideas but most ran into the same problem, the square gold minerals are almost the same size as the round silver minerals. One of the ideas presented involves wheels that would lower just past the height of the round silver minerals and would pick up the square gold minerals instead. We chose to focus gold minerals as there are more gold than silver (90 gold : 60 silver). Other ideas involved measuring the weight of the objects via trapdoor and/or on bot object filtering/sorting.

- (Mariah): Ben and I discussed the trapdoor idea thoroughly with one of the Jacobs engineers. Mr. Keith suggested a trapdoor be positioned underneath the mineral intake slot (whatever we decide to use) since the cube is just slightly heavier than the ball. If we use a weighted spring to hold the door in place, the cubes would fall through, and the balls would not. However, this idea seems a little risky and not the most accurate, due to the robot constantly moving while on the field. Therefore, an accurate reading would not be easy to obtain, and could cause the wrong mineral to fall through.

Here is the video Mrs. Dalton showed us (one idea of how to pick up the minerals).
https://twitter.com/Qbitz_ftc/status/1040033046429360129?s=09

We also got to begin building our field kit!

Date: Mon, 9/17/18	***Location***: Belbas House	***Purpose***: Team Meeting #3

Attendees: Ben, Mark, Mariah, Zach, Andrew, Coach Belbas, Mr. Bell, Mr. Lee, Mrs. Dalton, Arianna, Ezekiel, Mr. Dalton, Mr. Belbas, Mrs. Tate

Agenda:

- Set up Git and Source Tree on all Programming computers
- Discuss DC Motors
- Decide on Chassis Design

Reflections:

Today's meeting focused on motor types and the chassis. For motors we discussed the merits of the legal motors:

Motor	**Gear**	**Stall Torque**	**No Speed Load**	**Power (watts)**
AndyMark	20	175 oz-in	340 rpm	15W
AndyMark	40	350 oz-in	160 rpm	15W
AndyMark	60	593 oz-in	105 rpm	15W
Tetrix Max	--	--	--	--
Tornado		700 oz-in	100 rpm	
MR Matrix		462 oz-in	140-190 rpm	
REV R. HD Hex	*20*	*297.4 oz-in*	*300 rpm*	*15W*
REV R. HD Hex	40	594.7 oz-in	150 rpm	15W
REV R. Core Hex		453 oz-in	125 rpm	15W

To get optimum power output we want a motor that strikes the midway point between speed and torque (see graph on right).

We decided to go with the REV Robotics HD Hex motors because

- They have a near perfect balance between speed and torque
- The HD Hex motors also have hex-shaped axles (much easier to work with--as opposed to D-shaped axles)
- The encoders don't require level shifters because they are made by REV.

For the chassis, we tested both testbot and last year's robot (Gar-E) and looked at the robot chassis of other award winning teams. We determined

- That standard-sized wheels were able to cross over the crater barrier without issue
- That building in suspension was unnecessary
- That we are going to use mecanum wheels -- the Vex ones
- That we are going to build our chassis using carbon fiber tubes and plates -- as opposed to aluminum channels or HDPE plastic sheets.

Date: Sun, 9/18/18	***Location***: Andrew's House	***Purpose***: Programming Subgroup

Attendees: Andrew, Mr. Lee

Agenda:

- Investigating the new FTC_app release

Reflections:

Andrew: The most recent release of the FTC_app from FIRST shows a bunch of new classes and documentation supporting the use of UVC webcams (previously unsupported). The new classes include ways of using positional information inserted into the code (camera location on robot, VuMark location on field wall) and the position of the camera relative to the VuMark pattern to localize the robot's position on the field. This allows for using the VuMark patterns to navigate around the field during autonomous and potentially during teleop. A potential boon for the webcam support is the ability to have multiple cameras on the robot for navigation -- something teams were previously unable to do. Really cool :)

There is also support for a new 2 meter distance sensor from REV which will let us get our distance from an object (ie the wall) from the middle of the field. Again, so cool.

Date: Fri, 9/21/18	***Location***: Belbas House	***Purpose***: Team Meeting #4

Attendees: Luke, Mariah, Zach, Mark, Ben, Joel, Mr. Bell, Coach Belbas, Andrew

Agenda:
- Chassis Design Brainstorming
- Begin CAD work

Reflections:

Speed, modularity, and durability were each elements that we kept in mind while brainstorming our chassis. We decided that we wanted our chassis to have a 4 inch ground clearance to make sure that it can cross over the crater. We want to put our motors as close to the center of the robot so as to preserve space on the front and back for mechanisms. We will be using chain to connect the wheels to the motors. We are also designing our drive system to be in four modules. Each module will contain a motor and a wheel along with the chain connecting the two. This way we can easily replace parts or update the design.

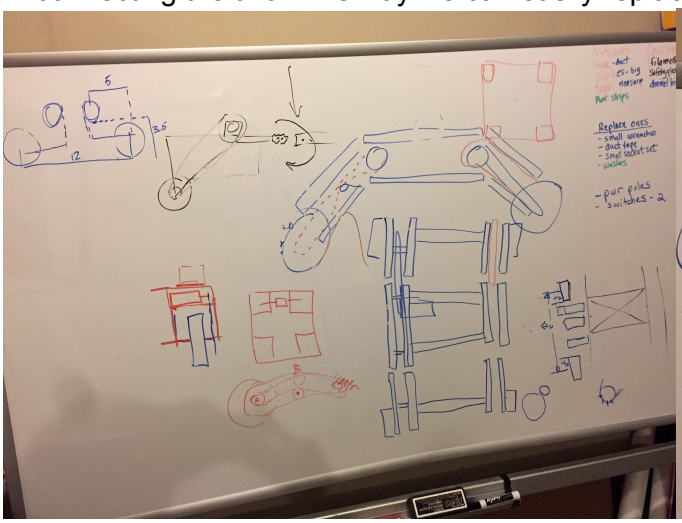

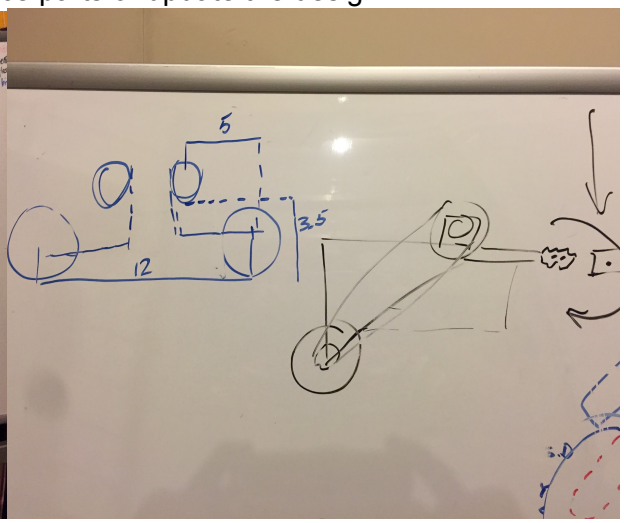

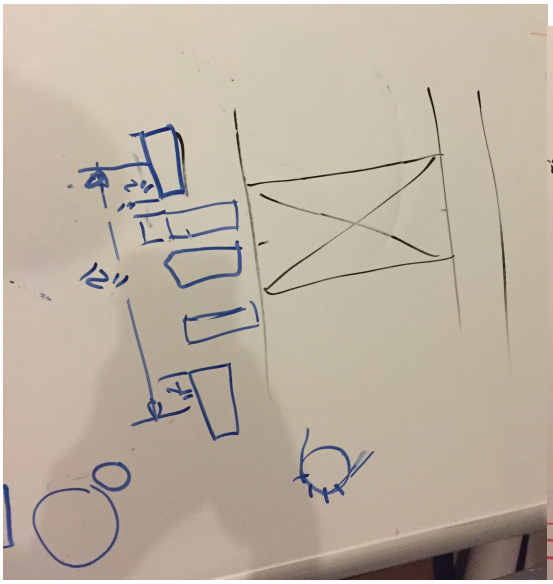

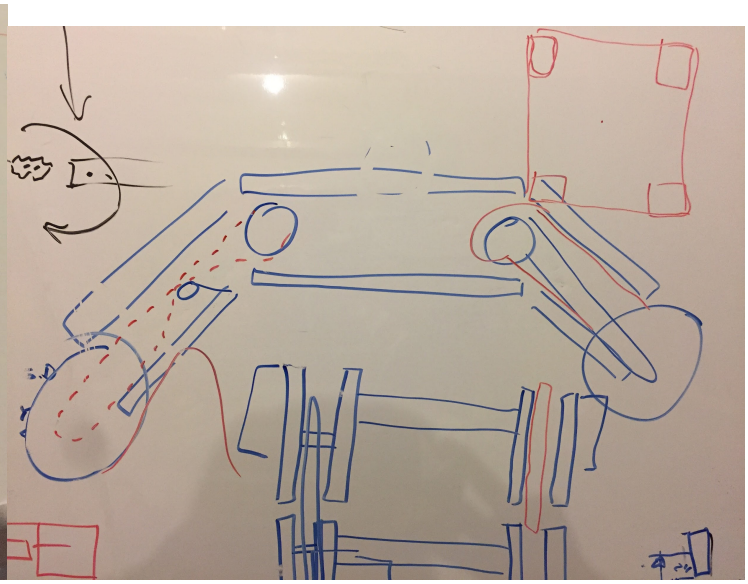

- Mecanum Conversion Subgroup (Luke, Mariah): Today, we were adjusting the conversion element from the team's previous year to fit our new design.

- Below are photos of the new conversion element (top and bottom pieces) that we modified to be compatible with our Rev robotics system. We needed a hex shaped axle, rather than the square axle the VEX wheels came with, so we made the proper adjustments. The new idea is to cut out the center of the wheel and replace it with our printed center.

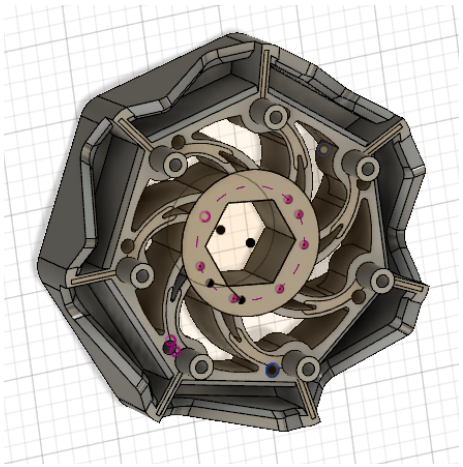

(Bottom piece) (Top piece)

Below are two photos of the VEX wheel before, and after the modifications.

Date: Mon, 9/24/18	***Location***: Belbas House	***Purpose***: Team Meeting #5

Attendees: Andrew, Mariah, Ben, Mark, Zach, Coach Belbas, Mr. Bell, Mrs. Dalton, Arianna, Ezekiel, Mrs. Gray

Agenda:

- Work on Chassis Design
- Check Hub Conversion pieces/cut apart
- Prep San Jac Laptops for Programming Workshop

Reflections:

Programming (Andrew, Ben, Mr. Lee): We spent the meeting getting the spare laptops from San Jac set up for the workshop. They all had Android Studio on them, but the firmware version was over a year old, so we had to update Android Studio on all of the computers. Once the computers were updated, we made sure that the code for that class was correctly imported into Android Studio. We got four of the six computers ready to go. The other two are almost there. We'll finish them on Friday.

Drive Modules (Zach, Mark, Mrs. Belbas): We decided today to use carbon fiber tubing to make frames for each drive module. Inside each we will make boxes that will house the sprockets and give rigidity and support to the rest of the module. The wheel will be between each carbon fiber frame. We will be using 20 tooth sprockets on the wheels and 26 tooth sprockets on the motor to give a little bit more speed. Once the box is made it should be really easy to switch sprockets out if more or less speed is desired. To make the assembly modular one carbon fiber tube will slide onto the chassis. The back will have one wall cut out so that it can slide above and below the chassis. Both pieces that touch the chassis will have two bolts for each side.

Vex Conversion Pieces (Mariah): The new conversion design was printed and arrived in time for today's meeting. When I tried to cut out the center of the Vex wheel, I discovered that Vex's CAD assembly of the wheel is different from how the wheel is actually constructed. Rather than the wheel being several smaller parts that are bolted together as shown in the CAD, the wheel is one single frame. This discovery voids the new conversion piece design, meaning that we will have to roll back to the original conversion piece design. The new design that won't work is shown below on the right.

This section is intentionally

Date: Tues. 9/25-26/18	***Location***: Tate House	***Purpose***: Programming Subgroup

Attendees: Ben, Mentor Tate

Agenda:
- Vuforia Scanning & Object Scanning

Reflections:

I first started out with samsung s5 phones and a navigation target on a wall approximately 7 ft away from the phone holder on the robot. I moved the robot forward until it could see the pictograph and then marked the distance between them. I repeated this step for all 4 pictographs and got a range of distances.
I used 3 regular sheets of paper for printing the pictographs and that might have had an effect on the scanning effectiveness of the camera.

Samsung s5 Phone distance from pictographs:
1. Back-space = 4ft ,Footprint = 5ft, Rover = 6ft, Crater = 6ft

Next I looked at the telemetry outputs and noticed that vuforia shows the following on the driver station:
1. Pitch ,Roll ,Heading & x,y,z coordinates (all coords are given from red alliance point of view

Vuforia Scanning App:
Here is the background screen that vuforia provides: (gray picture on the left)

I installed the vuforia scanning app on my samsung s5 robot controller. I attempted to scan in a gold mineral into the app so that the robot could recognize the mineral in autonomous.

To “scan in” an object you have to use the background screen behind it (upper left picture). This will allow the scanner to establish accurate data points on the object for it to recognize it when testing the scanned object.

Date: Friday, 9/28/2018	***Location***: Belbas house	***Purpose***: Team Meeting #6

Attendees: Mrs. Belbas, Andrew, Joel, Mark, Mariah, Ben, Josh

Agenda:
- Finish hub conversion pieces
- Finish Prep for the Workshop

Reflections:

CAD Subgroup (Mariah/Josh)
- We modified the VEX Hub conversion pieces to be sure they lined up correctly. We placed a small marking on each piece for ease of alignment.

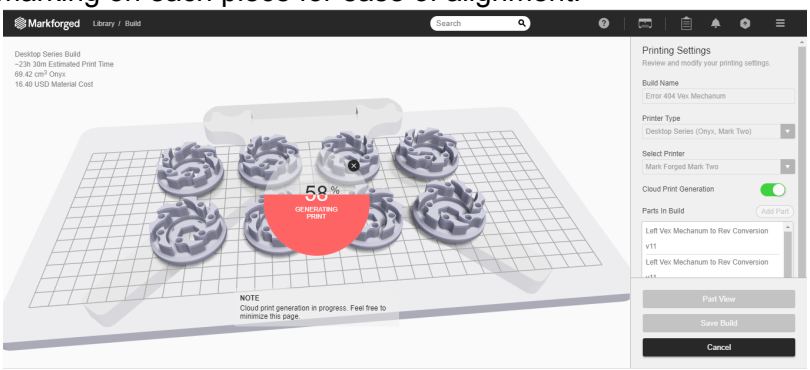

Then we went to the Markforged website to get the pieces ready to print.

Programming (Andrew, Ben):
- We finished setting up the San Jac computers, as well as two of the Belbas' computers, for the workshop; we put class materials on several flash drives; and we prepped both testbots.

CAD Mechanical Subgroup (Joel/Mark)
- Today we worked on designing the drive system in CAD. We decided to redesign our motor connector so that it would encapsulate the end of the motor instead of simply attaching via bolts. To improve integrity, we decided to extend both plates and add another standoff behind the back gear. Unfortunately, we ran out of time to make the final change. The picture on the right is the entire assembly as we left it. We will have 3D printable parts very soon.

Date: Sat, 9/29/18	***Location***: San Jacinto College	***Purpose***: Programming Workshop

Attendees: Coach Belbas, Andrew, Mr. Lee, Nick, Ben, Mariah

Agenda:

- Teach a Beginning Android Studio Programming Workshop

Reflections:

We presented a workshop on beginning programming at San Jacinto College. Andrew presented while Ben, Mariah, Nick, and Mr. Lee were available to help with problems the students had. We covered:

- Setting up the phones
- Creating config files
- Electronics
- Creating and Running an OpMode

We had about 50 people attend, which was about thirty more than we were prepared for, and many people didn't bring any equipment. Despite these hiccups we were able to run everyone through making their own config file on our test phones and a lot of people even got the robot running. We received good feedback on the class so even though many people didn't bring computers, they still learned some stuff.

Date: Sun, 9/30/18	***Location***: Lee House	***Purpose***: Mentoring

Attendees: Andrew, Robosapiens

Agenda:

- Help Robo Sapiens troubleshoot their problem

Reflections:

The Robosapiens contacted me through Google Hangouts with a problem: their phones weren't connecting. We set up a time for a video call, but in the meantime I walked them through several troubleshooting strategies via direct messaging. We eventually narrowed the problem to their app versions. The Driver's Station app was on version 3.7 while the Robot Controller was on 4.0. They upgraded their Driver's Station to 4.0 and everything worked again.

This section is intentionally left blank.

Date: Mon, 10/1/18	***Location***: Belbas House	***Purpose***: Team Meeting #7

Attendees: Mariah, Ben, Andrew, Mr. Lee, Coach Belbas, Mark, Zach, Mr. Bell

Agenda:
- Finish Assembly of Drive Train
- Clean up from Programming Workshop
- Talk about Classes and Objects with Mr. Lee

Reflections:
- Programming (Andrew, Ben, Mariah, Mr. Lee): During the first half of the meeting we went through everything we brought home from Saturday's programming workshop and separated our stuff from the college's stuff. After that, Mr. Lee went through the concept of objects and classes in java and how we can use them in our code.
- Mechanical (Mark, Zach): Today we continued to design the wheel module in CAD. Mark created an assembly with all of the components for the module (below), and Zach added stand-offs to the sprocket pieces behind the motor to reduce the chance that the sprocket pieces would bend and causing the chain to pop off. While assessing the remaining steps to finish the module, we noticed that the entire module from the wheel to the back channel was 7.7 inches. Our original plan was to build a 16-inch chassis, so the current length of the wheel module would leave very little room to build mechanisms. During the design phase, we lost track of the exact dimensions, partly because we forgot to account for the thickness of the carbon fiber tubing. We decided to make the wheel module smaller rather than waiting until later in the season and discovering it was too small and too late to redesign. So during this next week, we will shorten each piece of the module to conserve as much space as possible.
  The images below are the two sprocket box pieces.

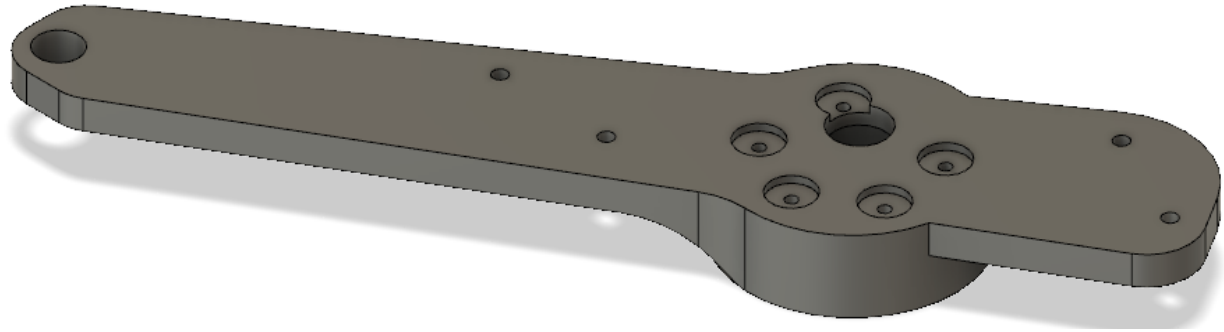

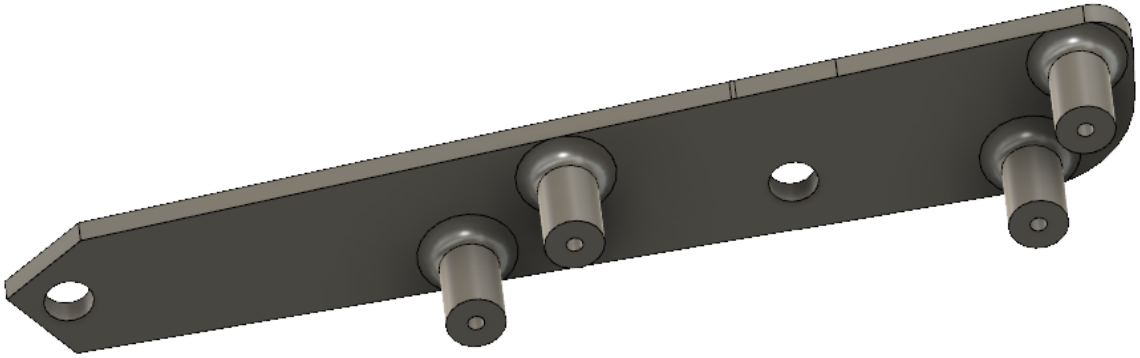

Shown below is the current version of the drive module assembly.

(Mariah): We got the finished conversion pieces!